

SETTING UP A QUADHEAD
WITH HIGHSECLABS KVMS

HighSecLabs
Highest Security Solutions

USE CASE

Operator requires a NIAP PP 4.0 Secure KVM with 4 displays at the desktop.

What you'll need.

- Up to eight (8) – 4-port host computer(s)
- Two (2) – Secure KVMs (2-, 4- or 8-port)
  Note: Number of host ports must match each SKVM.
- Four (4) – Console cables
- Up to thirty-two (32) – Host cables
- Up to eight (8) – USB/Audio cables (1 per host computer)

  -USB Keyboard/Mouse/Audio combo cable, 6' OR

  -USB Keyboard/Mouse/Audio combo cable, 10'
- One (1) – Remote control (2-, 4- or 8-port) with included RJ14 adapter
  Note: Remote control ports must match SKVM host ports.

  -WR20-MM for two 2-port SKVMs

  - WR40-MM for two 4-port SKVMs

  - WR80-MM for two 8-port SKVMs
- One (1) - RCU Spiltter

  -WX21N-4 with two (2) included RJ14 cables

Before you begin

CAN YOUR COMPUTER SUPPORT 4 DISPLAYS?

Four displays require support for four times the resolution of a single monitor setup, especially for higher resolutions like 4K. Not all computers support this.

Multiple monitor support is dependent on the graphics card on the host computer(s). To verify what graphics card is installed, you can typically search by going to **Control Panel > Device Manager > Display Adapters**. Search the graphics card manufacturer's display support section for multi-monitor support confirmation and number of monitors supported.

Note: A Google search of the graphics card and the monitor setup (e.g. "Nvidia GTX 1660 four monitors") often offers quick confirmation.

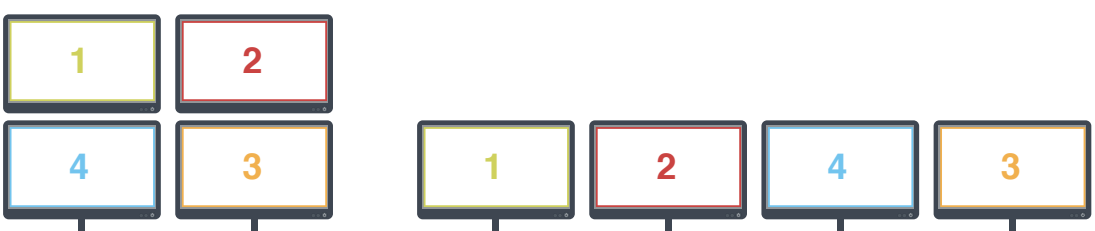

Sample Display Configurations

HOW TO ASSEMBLE A QUAD DISPLAY SKVM SETUP

1. Disconnect power supply from all SKVMs and displays.
2. Connect display #1 to upper console port on SKVM #1.
3. Connect display #2 to lower console port on SKVM #1.
4. Connect display #3 to upper console port on SKVM #2.
5. Connect display #4 to lower console port on SKVM #2.
6. Connect two RJ14 cables to the OUT 1 and OUT 2 ports of the RCU Synchronized Replicator.
7. Connect the other ends of the RJ14 cables to the RC ports of SKVMs #1 and #2.
8. Connect RJ14 adapter to RCU IN port of the RCU Synchronized Replicator.
9. Connect the remote control to the RJ14 adapter.
   a) Both SKVMs will require the same number of host ports for the WR20-MM, WR40-MM and WR80-MM to be used as controllers.
10. Connect host port #1 to channel 1 upper host port on SKVM #1.
11. Connect host port #2 to channel 1 lower host port on SKVM #1.
12. Connect host port #3 to channel 1 upper host port on SKVM #2.
13. Connect host port #4 to channel 1 lower host port on SKVM #2.
14. Connect mouse and keyboard to SKVM #1.
15. Connect USB/Audio cables to channel 1 Audio and K/M ports on SKVM #1.
16. Repeat steps 10-15 for all host computers.
17. Connect power supply to all displays and power up.
18. Power on SKVM #1.
19. Power on SKVM #2.
20. Power on host PCs.

TWO DK42PHU-4 SKVMS SHOWN WITH ONE 4-HOST PC

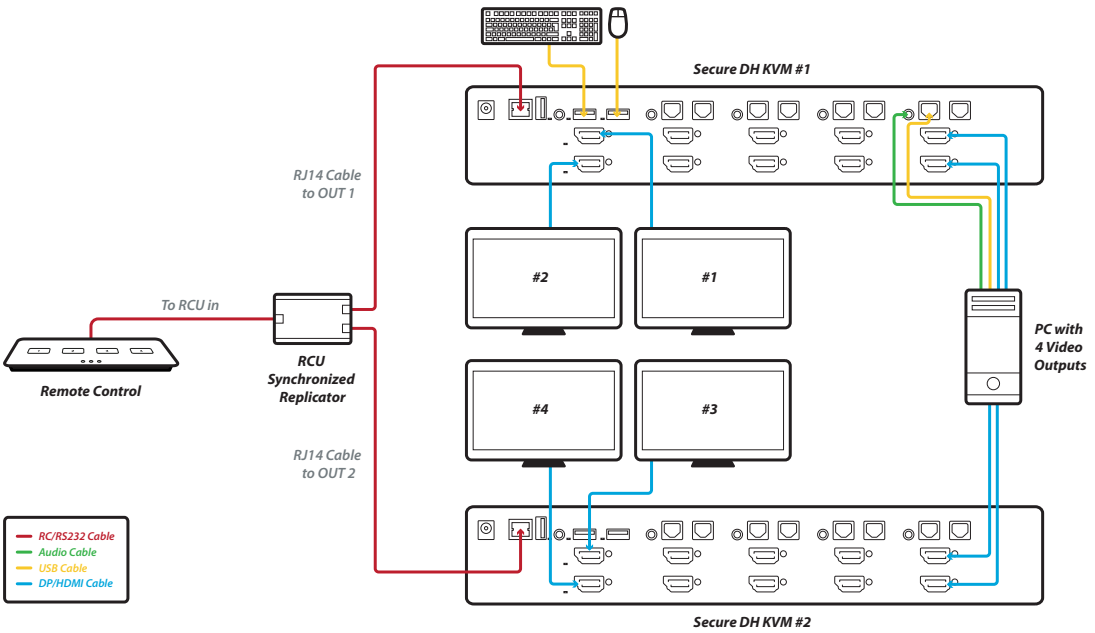

ABOUT HIGHSECLABS

High Sec Labs (HSL) develops high-quality, cyber-defence solutions in the field of network and peripheral isolation for protecting national assets and infrastructure.

The company, headquartered in Caesarea Israel, was founded in 2008 and has a second manufacturing site in the United States.

High Sec Lab's roots are deeply embedded in the defense and commercial industries developing cyber protection solutions. Among its customers are some of the world's leading governments and defense organizations as well as commercial companies such as banks, healthcare providers, and national infrastructure companies.

HighSecLabs
Highest Security Solutions

© 2024 HighSecLabs Inc. All rights reserved. All trade names are trademarks or registered trademarks of respective manufacturers listed. Specifications are subjected to change without prior notice.
Patents: www.highseclabs.com/patents/. HLT33005 Rev 1.0